Electrolux PROFESSIONAL

Modular Cooking Range Line 700XP Full Module Freestanding Gas Char-Grill

ITEM #

MODEL #

NAME #

SIS #

AIA #

371438 (E7JJATBAMEI) Full module gas Grill free standing, Q Mark

Short Form Specification

Item No.

To be installed on height adjustable feet in stainless steel. High efficiency 16 kW stainless steel gas burners with flame failure device, protected by deflection trays. Suitable for natural gas or LPG. Cooking surface grids in enameled cast iron, easily removable for cleaning. Exterior panels in stainless steel with Scotch Brite finish. One piece pressed work top in 1.5 mm thick stainless steel. Right-angled side edges to allow flush-fitting junction between units.

APPROVAL:

Main Features

- The low temperature of the external panels allow to work in safety.
- Stainless steel burners with flame failure device.
- Burners are protected by deflection trays to prevent fat dripping on them.
- Stainless steel high splash guard on the rear and sides can be easily removed for cleaning and is dishwasher-safe.
- Unit delivered with four 50 mm legs in stainless steel as standard (all round Stainless steel kick plates as option).
- Cooking grids made in highly resistant enameled cast iron for easy cleaning.

Construction

- All exterior panels in Stainless Steel with Scotch Brite finishing.
- One piece pressed 1.5 mm work top in Stainless steel.
- Model has right-angled side edges to allow flush fitting joints between units, eliminating gaps and possible dirt traps.
- IPx4 water protection.
- Q Mark model delivered with nozzles for G30-50 mbar.

Included Accessories

- 1 of Scraper for free standing grills PNC 206422

Optional Accessories

- Junction sealing kit PNC 206086 ❑
- Draught diverter, 150 mm diameter PNC 206132 ❑
- Matching ring for flue condenser, 150 mm diameter PNC 206133 ❑
- Kit 4 wheels - 2 swivelling with brake - it is mandatory to install Base support and wheels PNC 206135 ❑
- Flanged feet kit PNC 206136 ❑
- Frontal kicking strip for concrete installation, 800mm PNC 206148 ❑
- Frontal kicking strip for concrete installation, 1000mm PNC 206150 ❑
- Frontal kicking strip for concrete installation, 1200mm PNC 206151 ❑
- Frontal kicking strip for concrete installation, 1600mm PNC 206152 ❑
- Frontal kicking strip, 800mm (not for refr-freezer base) PNC 206176 ❑
- Frontal kicking strip, 1000mm (not for refr-freezer base) PNC 206177 ❑
- Frontal kicking strip, 1200mm (not for refr-freezer base) PNC 206178 ❑
- Frontal kicking strip, 1600mm (not for refr-freezer base) PNC 206179 ❑
- Kit 4 feet for concrete installation (not for 900 line free standing grill) PNC 206210 ❑
- Central support for installation of drawers and grid (on 800/1200mm bases) and of doors (on 1200mm bases) PNC 206245 ❑
- Flue condenser for 1 module, 150 mm diameter PNC 206246 ❑
- 2 panels for service duct for single "top on base" installation PNC 206248 ❑
- Pair of side kicking strips PNC 206249 ❑
- Pair of side kicking strips for concrete installation PNC 206265 ❑
- Water filling tap for free standing grills PNC 206281 ❑
- Chimney upstand, 800mm PNC 206304 ❑
- Right and left side handrails PNC 206307 ❑
- Back handrail 800 mm PNC 206308 ❑
- Base support for feet or wheels - 800mm (700/900) PNC 206367 ❑
- Base support for feet or wheels - 1200mm (700/900) PNC 206368 ❑
- Base support for feet or wheels - 1600mm (700/900) PNC 206369 ❑
- Base support for feet or wheels - 2000mm (700/900) PNC 206370 ❑
- Rear paneling - 800mm (700/900) PNC 206374 ❑
- Rear paneling - 1000mm (700/900) PNC 206375 ❑
- Rear paneling - 1200mm (700/900) PNC 206376 ❑
- Kit town gas nozzles (G150) for 700 grill PNC 206389 ❑
- Stainless steel grid for free standing wide grills (700XP) PNC 206410 ❑
- Stainless steel grids with drain shape for free standing wide grills (700XP) PNC 206411 ❑
- Scraper for grids with drainage channels - top grills PNC 206421 ❑
- Scraper for free standing grills PNC 206422 ❑
- Kit G.25.3 (NI) gas nozzles for 700 and 900 gas grills (standard and HP) PNC 206462 ❑
- 2 side covering panels for free standing appliances PNC 216000 ❑
- Frontal handrail, 800mm PNC 216047 ❑
- Frontal handrail, 1200mm PNC 216049 ❑
- Frontal handrail, 1600mm PNC 216050 ❑
- Large handrail - portioning shelf, 800mm PNC 216186 ❑
- Pressure regulator for gas units PNC 927225 ❑

The company reserves the right to make modifications to the products without prior notice. All information correct at time of printing.

2024.10.08

Modular Cooking Range Line 700XP Full Module Freestanding Gas Char-Grill

Front

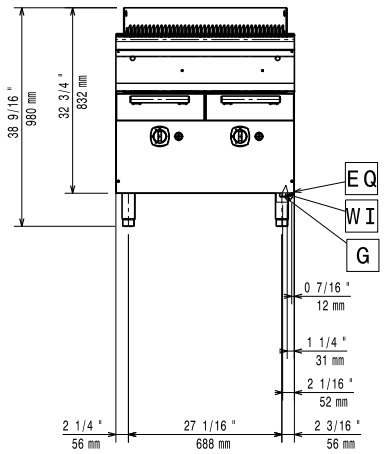

Side

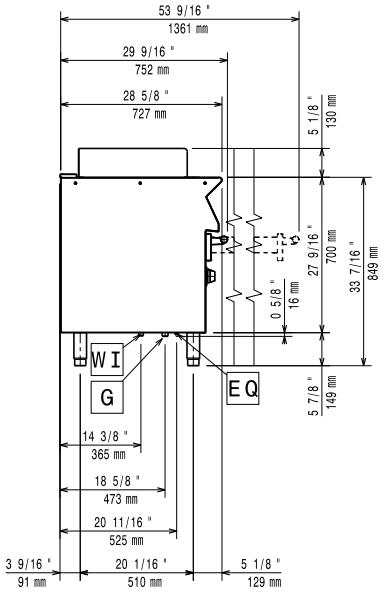

EQ = Equipotential screw
G = Gas connection

Top

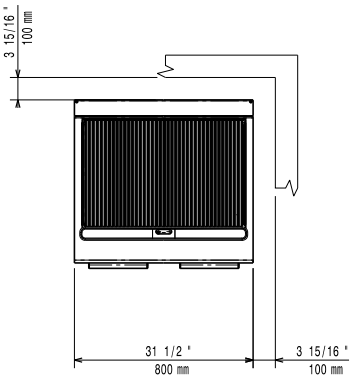

Gas

Gas Power:	
371438 (E7JJATBAMEI)	16 kW
Standard gas delivery:	G30 – 50 mbar
Gas Type Option:	G31 37 mbar
Gas Inlet:	1/2"

Key Information:

Cooking surface width:	631 mm
Cooking surface depth:	478 mm
Net weight:	75 kg
Shipping weight:	95 kg
Shipping height:	1180 mm
Shipping width:	820 mm
Shipping depth:	860 mm
Shipping volume:	0.83 m³

If appliance is set up or next to or against temperature sensitive furniture or similar, a safety gap of approximately 150 mm should be maintained or some form of heat insulation fitted.

Certification group:	N7GG

The company reserves the right to make modifications to the products without prior notice. All information correct at time of printing.

2024.10.08